EVOLUTION™

S355 CPSL

084-0001B, 084-0002B, 084-0003B, 084-0006B

S355 CPS

084-0001, 084-0002, 084-0003, 084-0006

S355 CPS G2

084-0001A, 084-0002A,
084-0003A, 084-0006A

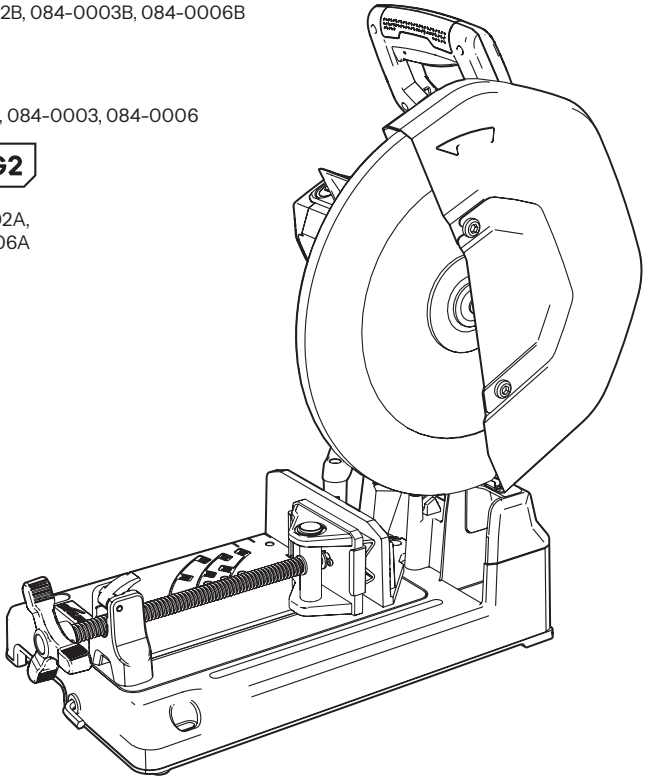

Original Instructions

084-0901

PRODUCT	S355CPSL	S355CPS	S355CPS-G2
Product Code UK (220-240V Plug)	084-0001B	084-0001	084-0001A
Product Code UK (110V Plug)	084-0002B	084-0002	084-0002A
Product Code EU (220-240V Plug)	084-0003B	084-0003	084-0003A
Product Code AUS (240V Plug)	084-0006B	084-0006	084-0006A
SPECIFICATIONS			
Motor UK/EU/AUS (220-240V ~ 50Hz)	2200W	2200W	2200W
Motor UK (110V ~ 50Hz)	1600W	1600W	1600W
Rated Speed	1550min^{-1}	1550min^{-1}	1100min^{-1}
Net Weight	23kg	23kg	25.3kg
Cable Length	3m	3m	3m
CUTTING CAPACITY			
Mild Steel Plate (Max. Thickness)	12mm	12mm	12mm
Stainless Steel Plate (Max. Thickness) (Stainless blade must be fitted)	5mm	5mm	-
Square Tube at 90°	120 x 120mm	120 x 120mm	120 x 120mm
Square Tube at 45°	89 x 89mm	89 x 89mm	89 x 89mm
Rectangle Tube at 90°	95 x 180mm	95 x 180mm	95 x 180mm
Rectangle Tube at 45°	78 x 110mm	78 x 110mm	78 x 110mm
Round Tube at 90°	Ø 130mm	Ø 130mm	Ø 130mm
Round Tube at 45°	Ø 105mm	Ø 105mm	Ø 105mm
Minimum Cut Off Piece Length	8 mm	8 mm	8 mm
BLADE			
Diameter	355mm	355mm	355mm
UK & EU Bore	25.4mm	25.4mm	25.4mm
Kerf	2.4mm	2.4mm	2.4mm
Teeth (Mild Steel Blade)	66	66	80
Teeth (Stainless Steel Blade - AUS model only)	90	90	90
NOISE & VIBRATION DATA			
Sound Pressure Max LpA	**110V:** 100.5dB(A) **220-240V:** 97.3dB(A)	**110V:** 100.5dB(A) **220-240V:** 97.3dB(A)	**110V:** 98,5dB(A) **220-240V:** 95,3dB(A)
Sound Power Level Max LwA	**110V:** 111.5dB(A) **220-240V:** 108.3dB(A)	**110V:** 111.5dB(A) **220-240V:** 108.3dB(A)	**110V:** 111,5dB(A) **220-240V:** 108,3dB(A)
Uncertainty KpA & KwA	3dB(A)	3dB(A)	3dB(A)

LABELS & SYMBOLS	
	Warning
	Read Instructions
	Wear Safety Goggles
	Wear Ear Protection
	Wear Dust Protection
	Wear Safety Gloves
	Keep Hands Away
	Protection Class II Double Insulated
	CE Certification
C LISTED US Intertek 5012207	ETL Certification
	Waste Electrical & Electronic Equipment
	Triman - Waste Collection & Recycling
5490	(RCM) Regulatory Compliance Mark for electrical and electronic equipment. Australian/New Zealand Standard
/	Unlock / Lock
	Purchase separately

INTENDED USE OF THIS POWER TOOL

This product is a chop saw and has been designed to be used with Evolution blades only. Only use accessories designed for use in this machine and/or those recommended specifically by Evolution Power Tools Ltd.

When fitted with an appropriate blade this machine can be used to cut: Mild Steel, Thin Steel, Stainless Steel, Aluminium, Wood, Masonary.

Note: Cutting galvanised steel may reduce blade life.

GENERAL POWER TOOL SAFETY WARNINGS

⚠ **WARNING: Read all safety warnings, instructions, illustrations and specifications provided with this power tool.** Failure to follow all instructions listed below may result in electric shock, fire and/or serious injury.

Save all warnings and instructions for future reference. The term "power tool" in the warnings refers to your mains-operated (corded) power tool or battery-operated (cordless) power tool.

WORK AREA SAFETY

- **Keep work area clean and well lit.** Cluttered or dark areas invite accidents.
- **Do not operate power tools in explosive atmospheres, such as in the presence of flammable liquids, gases or dust.** Power tools create sparks which may ignite the dust or fumes.
- **Keep children and bystanders away while operating a power tool.** Distractions can cause you to lose control.

ELECTRICAL SAFETY

- **Power tool plugs must match the outlet. Never modify the plug in any way. Do not use any adapter plugs with earthed (grounded) power tools.** Unmodified plugs and matching outlets will reduce the risk of electric shock.
- **Avoid body contact with earthed or grounded surfaces, such as pipes, radiators, ranges and refrigerators.** There is an increased risk of electric shock if your body is earthed or grounded.
- **Do not expose power tools to rain or wet conditions.** Water entering a power tool will increase the risk of electric shock.
- **Do not abuse the cord. Never use the cord for carrying, pulling or unplugging the power tool. Keep cord away from heat, oil, sharp edges or moving parts.** Damaged or entangled cords increase the risk of electric shock.
- **When operating a power tool outdoors, use an extension cord suitable for outdoor use.** Use of a cord suitable for outdoor use reduces the risk of electric shock.
- **If operating a power tool in a damp location is unavoidable, use a residual current device (RCD) protected supply.** Use of an RCD reduces the risk of electric shock.

PERSONAL SAFETY

- **Stay alert, watch what you are doing and use common sense when operating a power tool. Do not use a power tool while you are tired or under the influence of drugs, alcohol or medication.** A moment of inattention while operating power tools may result in serious personal injury.
- **Use personal protective equipment. Always wear eye protection.** Protective equipment such as a dust mask, non-skid safety shoes, hard hat or hearing protection used for appropriate conditions will reduce personal injuries.
- **Prevent unintentional starting. Ensure the switch is in the off-position before connecting to power source and/or battery pack, picking up or carrying the tool.** Carrying power tools with your finger on the switch or energising power tools that have the switch on invites accidents.
- **Remove any adjusting key or wrench before turning the power tool on.** A wrench or key left attached to a rotating part of a power tool may result in personal injury.
- **Do not overreach. Keep proper footing and balance at all times.** This enables better control of the power tool in unexpected situations.
- **Dress properly. Do not wear loose clothing or jewellery. Keep your hair and clothing away from moving parts.** Loose clothes, jewellery or long hair can be caught in moving parts.
- **If devices are provided for the connection of dust extraction and collection facilities, ensure that these are connected and properly used.** Use of dust collection can reduce dust-related hazards.
- **Do not let familiarity gained from frequent use of tools allow you to become complacent and ignore tool safety principles.** A careless action can cause severe injury within a fraction of a second.

POWER TOOL USE AND CARE

- **Do not force the power tool. Use the correct power tool for your application.** The correct power tool will do the job better and safer at a rate for which it was designed.
- **Do not use the power tool if the switch does not turn it on and off.** Any power tool that cannot be controlled with the switch is dangerous and must be repaired.
- **Disconnect the plug from the power source and/or remove the battery pack, if detachable, from the power tool before making any adjustments, changing accessories, or storing power tools.** Such preventive safety measures reduce the risk of starting the power tool accidentally.
- **Store idle power tools out of the reach of children and do not allow persons unfamiliar with the power tool or these instructions to operate the power tool.** Power tools are dangerous in the hands of untrained users.
- **Maintain power tools and accessories. Check for misalignment or binding of moving parts, breakage of parts and any other condition that may affect the power tool's operation. If damaged, have the power tool repaired before use.** Many accidents are caused by poorly maintained power tools.
- **Keep cutting tools sharp and clean.** Properly maintained cutting tools with sharp cutting edges are less likely to bind and are easier to control.
- **Use the power tool, accessories and tool bits etc. in accordance with these instructions, taking into account the working conditions and the work to be performed.** Use of the power tool for operations different from those intended could result in a hazardous situation.
- **Keep handles and grasping surfaces dry, clean and free from oil and grease.** Slippery handles and grasping surfaces do not allow for safe handling and control of the tool in unexpected situations.

POWER TOOL SERVICE

- **Have your power tool serviced by a qualified repair person using only identical replacement parts.** This will ensure that the safety of the power tool is maintained.

SAFETY INSTRUCTIONS FOR CUT OFF SAWS

- **The guard provided with the tool must be securely attached to the power tool and positioned for maximum safety, so the least amount of wheel is exposed towards the operator. Position yourself and bystanders away from the plane of the rotating wheel.** The guard helps to protect operator from broken wheel fragments and accidental contact with wheel.
- **Use only bonded reinforced or diamond cut-off wheels for your power tool.** Just because an accessory can be attached to your power tool, it does not assure safe operation.
- **The rated speed of the accessory must be at least equal to the maximum speed marked on the power tool.** Accessories running faster than their rated speed can break and fly apart.
- **Wheels must be used only for recommended applications. For example: do not grind with the side of cut-off wheel.** Abrasive cut-off wheels are intended for peripheral grinding, side forces applied to these wheels may cause them to shatter.
- **Always use undamaged wheel flanges that are of correct**

diameter for your selected wheel. Proper wheel flanges support the wheel thus reducing the possibility of wheel breakage.

- **The outside diameter and the thickness of your accessory must be within the capacity rating of your power tool.** Incorrectly sized accessories cannot be adequately guarded or controlled.
- **The arbour size of wheels and flanges must properly fit the spindle of the power tool.** Wheels and flanges with arbour holes that do not match the mounting hardware of the power tool will run out of balance, vibrate excessively and may cause loss of control.
- **Do not use damaged wheels. Before each use, inspect the wheels for chips and cracks. If power tool or wheel is dropped, inspect for damage or install an undamaged wheel. After inspecting and installing the wheel, position yourself and bystanders away from the plane of the rotating wheel and run the power tool at maximum no load speed for one minute.** Damaged wheels will normally break apart during this test time.
- **Wear personal protective equipment. Depending on application, use face shield, safety goggles or safety glasses. As appropriate, wear dust mask, hearing protectors, gloves and shop apron capable of stopping small abrasive or workpiece fragments.** The eye protection must be capable of stopping flying debris generated by various operations. The dust mask or respirator must be capable of filtrating particles generated by your operation. Prolonged exposure to high intensity noise may cause hearing loss.
- **Keep bystanders a safe distance away from work area. Anyone entering the work area must wear personal protective equipment.** Fragments of workpiece or of a broken wheel may fly away and cause injury beyond immediate area of operation.
- **Hold the power tool by insulated gripping surfaces only, when performing an operation where the cutting accessory may contact hidden wiring or its own cord.** Cutting accessory contacting a "live" wire may make exposed metal parts of the power tool "live" and could give the operator an electric shock.
- **Position the cord clear of the spinning accessory.** If you lose control, the cord may be cut or snagged and your hand or arm may be pulled into the spinning wheel.
- **Never lay the power tool down until the accessory has come to a complete stop.** The spinning wheel may grab the surface and pull the power tool out of your control.
- **Do not run the power tool while carrying it at your side.** Accidental contact with the spinning accessory could snag your clothing, pulling the accessory into your body.
- **Regularly clean the power tool's air vents.** The motor's fan will draw the dust inside the housing and excessive accumulation of powdered metal may cause electrical hazards.
- **Do not operate the power tool near flammable materials.** Sparks could ignite these materials.

FURTHER SAFETY INSTRUCTIONS FOR ABRASIVE CUTTING-OFF OPERATION

Kickback and related warnings

Kickback is a sudden reaction to a pinched or snagged rotating wheel. Pinching or snagging causes rapid stalling of the rotating wheel which in turn causes the uncontrolled power tool to be forced in the direction opposite of the wheel's rotation at the point of the binding.
For example, if an abrasive wheel is snagged or pinched by the workpiece, the edge of the wheel that is entering into the pinch point can dig into the surface of the material causing the wheel to climb out or kick out. The wheel may either jump toward or away from the operator, depending on direction of the wheel's movement at the point of pinching. Abrasive wheels may also break under these conditions. Kickback is the result of power tool misuse and/or incorrect operating procedures or conditions and can be avoided by taking proper precautions as given below.

- **Maintain a firm grip on the power tool and position your body and arm to allow you to resist kickback forces. Always use auxiliary handle, if provided, for maximum control over kickback or torque reaction during start-up.** The operator can control torque reactions or kickback forces, if proper precautions are taken.
- **Never place your hand near the rotating accessory.** Accessory may kickback over your hand.
- **Do not position your body in line with the rotating wheel.** Kickback will propel the tool in direction opposite to the wheel's movement at the point of snagging.
- **Use special care when working corners, sharp edges etc. Avoid bouncing and snagging the accessory.** Corners, sharp edges or bouncing have a tendency to snag the rotating accessory and cause loss of control or kickback.
- **Do not attach a saw chain, woodcarving blade, segmented diamond wheel with a peripheral gap greater than 10 mm or toothed saw blade.** Such blades create frequent kickback and loss of control.
- **Do not "jam" the wheel or apply excessive pressure. Do not attempt to make an excessive depth of cut.** Overstressing the wheel increases the loading and susceptibility to twisting or binding of the wheel in the cut and the possibility of kickback or wheel breakage.
- **When wheel is binding or when interrupting a cut for any reason, switch off the power tool and hold the power tool motionless until the wheel comes to a complete stop. Never attempt to remove the wheel from the cut while the wheel is in motion otherwise kickback may occur.** Investigate and take corrective action to eliminate the cause of wheel binding.
- **Do not restart the cutting operation in the workpiece. Let the wheel reach full speed and carefully re-enter the cut.** The wheel may bind, walk up or kickback if the power tool is restarted in the workpiece.
- **Support panels or any oversized workpiece to minimize the risk of wheel pinching and kickback.** Large workpieces tend to sag under their own weight. Supports must be placed under the workpiece near the line of cut and near the edge of the workpiece on both sides of the wheel.

ADDITIONAL WARNINGS

- **Wear a dust mask.** Exposure to dust particles can be harmful to your health and make it difficult to breath. Use a dust extraction system and wear a suitable protective mask.
- **Wear noise protection.** Exposure to high volumes of noise may cause hearing damage.
- **Evolution recommends the use of tungsten carbide tip or cermet carbide tip toothed blades only on this machine. This machine is not designed for use with abrasive wheels.**
- **Use only saw blades that comply with the characteristics specified in this manual.**
- **Use only saw blade diameter(s) in accordance with the markings.**
- **Use only saw blades with a speed marking that is higher than or equal to the speed marked on the tool.**
- **Use only saw blades recommended by the manufacturer.**

RESIDUAL RISKS

Even with application of safety standards and using the tool as prescribed, certain residual risks can remain:

- **Risk of personal injury due to prolonged use.**
- **Risk of injury caused by dust.**
- **Risk of injury caused by flying objects.**
- **Risk of burns due to accessories becoming hot.**

CLEANING AND MAINTENANCE

⚠ **WARNING: Disconnect the tool from the power source before any adjustments, cleaning, or maintenance is carried out.**

- **Use compressed air to blow dirt out of the main housing air vents and the blade guard.** Wear approved eye protection and a dust mask.
- **Use a cloth dampened with water to clean the other areas of the tool.** Never use solvent based or harsh chemicals of any type as this may weaken, damage or destroy plastic components.
- **Do not attempt to modify the tool or accessories in any way.**

- **When servicing only use Evolution original parts and carried out by a qualified person.**

NOISE WARNING

⚠ **WARNING: The noise emissions during actual use of the power tool can differ from the declared values depending on the ways in which the tool is used especially what kind of workpiece is processed.**

⚠ **WARNING: The need to identify safety measures to protect the operator that are based on an estimation of exposure in the actual conditions of use (taking account of all parts of the operating cycle such as the times when the tool is switched off and when it is running idle in addition to the trigger time).**
The declared noise emission value(s) have been measured in accordance with a standard test method and may be used for comparing one tool with another. The declared noise emission value(s) may also be used in a preliminary assessment of exposure.

ENVIRONMENTAL PROTECTION

Waste electrical products should not be disposed of with household waste. Please recycle where facilities exist. Check with your Local Authority or retailer for recycling advice.

SETTING UP THE SAW

⚠ **WARNING: To reduce risk of injury, disconnect the tool from the power source before installing, repositioning or removing accessories Only connect the plug to the power source just before starting the saw.**

⚠ **WARNING: Only transport the saw with the cutting head in the down position, with the locking pin fully engaged (Fig.1).**

Note: The bases on all these chop saw models have mounting holes (located in the corners) which with suitable fixings (not supplied) can be placed to secure the machine.

When mounting the machine onto a saw stand or appropriate worktop, consider the following guidelines:

- **Position the saw away from other people or bystanders to avoid potential injury due to flying debris.**
- **Locate the saw on a firm, level surface where there is plenty of room for handling and properly supporting the workpiece.**
- **Ensure the power cord is positioned away from the machine to avoid entanglement or causing obstruction during cutting operations.**

ASSEMBLY

- **Fig.1 Locking the head position**
- **Fig.2 Installing/removing the blade**

PRE-CUTTING CHECKS

- **Ensure that the power supply matches the requirements specified on the machines rating plate.**
- **If an extension cable is required it must be of a suitable type for the work environment. If used outdoors it should be waterproof and so labelled.**
- **The manufacturers instructions should be followed when using an extension cable.**
- **Route any extension cable so that it does not pose a trip (or any other) hazard to the operator, colleagues or any bystanders.**

CUTTING

⚠ **WARNING: Ensure the workpiece is supported for stable cutting. Allow the blade to reach maximum speed before starting the cut. Cut smoothly and allow the blade to do the work without forcing the blade.**

- **Fig. 3 Mitering the rear vice and using the quick-release clamp**
- **Fig. 4 Repositioning the rear mitre vice**

Note: There are three possible positions for the rear vice **(Fig. 4)** to allow the user to make cuts based on different material profiles and angles. For example, the rearmost position **(A)** enables the widest section of some workpieces to be cut, while the most frontal position **(C)** is most ideal for cutting box-section mild steel at a 45° angle. Ensure the workpiece is positioned so that the blade can cover the length of the desired cut entirely before cutting.

- **Fig. 5 Rear vice positioning for 90° cutting**
- **Fig. 6 Rear vice positioning for 45° cutting**

⚠ **WARNING: Always ensure the material will be covered by the cutting area of the blade before making a cut.**

- **Fig. 7 Performing cuts**
- **Fig. 8 Emptying the chip collection tray** *(die-cast base models only)*

MAINTENANCE AND ADJUSTMENTS

- **Fig. 9 Replacing the carbon brushes**

Note: Excessive sparking may indicate the presence of dirt in the motor or worn out carbon brushes. Disconnect the machine from the power supply before attempting to replace or check the carbon brushes. Replace both carbon brushes if either has less than 6mm length of carbon remaining, or if the spring or wire is damaged or burned.

To replace the carbon brush, unscrew the plastic caps found at the side of the motor carefully **(Fig. 9).** Remove the brushes from their springs, and if necessary, replace the brushes and the caps. Fit the caps back to the motor and screw to tighten. Run the motor without load to test new brushes.

Fig. 10 Cutting head travel adjustment

Note: To prevent the blade from contacting any part of the machines metal base, the downward travel of the Cutting Head can be adjusted.

Lower the Cutting Head and check for any blade contact with the machines base. If the downward travel of the Cutting Head needs to be adjusted, do the following:

- Loosen the locknut **(A)** on the downward travel stop screw.
- Turn the adjusting screw **(B)** out (counter-clockwise) to decrease the downwards travel of the Cutting Head.
- Turn the adjusting screw in (clockwise) to increase the downwards travel of the Cutting Head.
- Tighten the adjustment screw locknut when satisfactory downward travel of the Cutting Head is achieved.

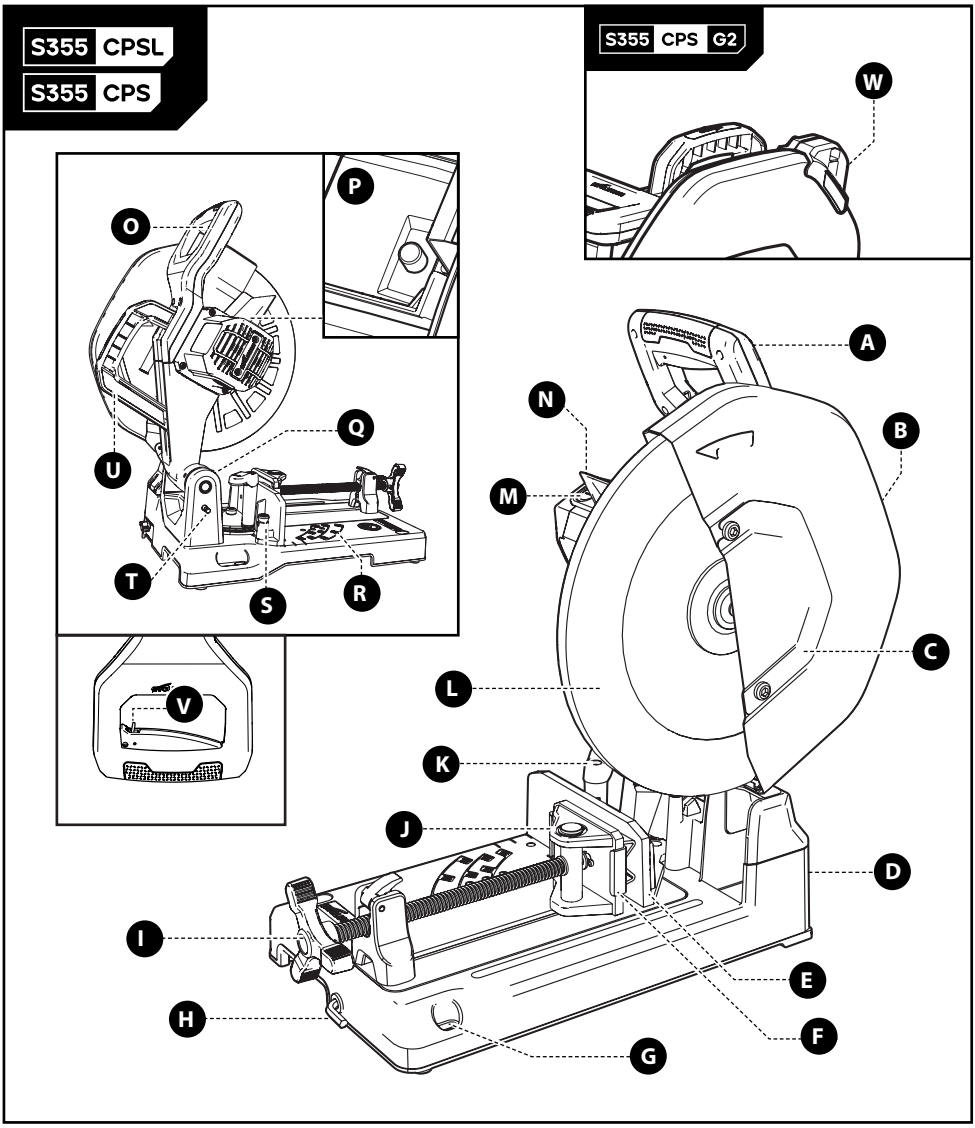

A. Front handle
B. Upper blade guard
C. Blade bolt guard
D. Chip collection tray
E. Adjustable rear vice
F. V-block adaptor
G. Mounting holes
H. Hex key
I. Vice handle
J. Front vice jaw
K. Rear vice jaw locking lever
L. Lower blade guard
M. Carbon brush access cap
N. Cutting guard
O. On/Off trigger switch
P. Blade lock button
Q. Travel stop adjustment adjustment screw
R. Mitre scale
S. Positive stop location pin
T. Lock down pin
U. Carry handle
V. Safety trigger lock
W. LED housing*

*S355CPS-G2 only.

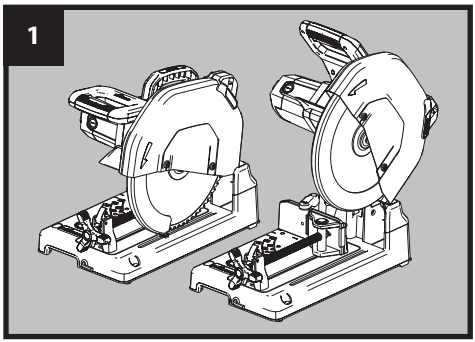
1

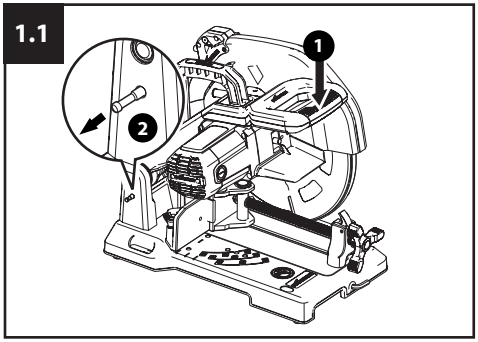
1.1
1
2

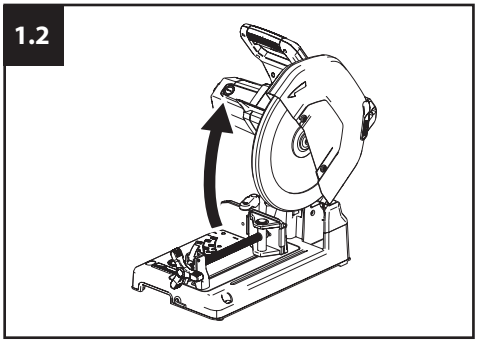
1.2

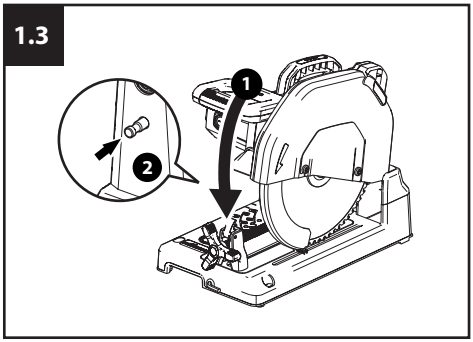
1.3
1
2

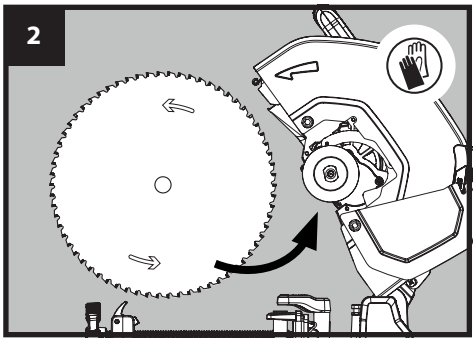
2

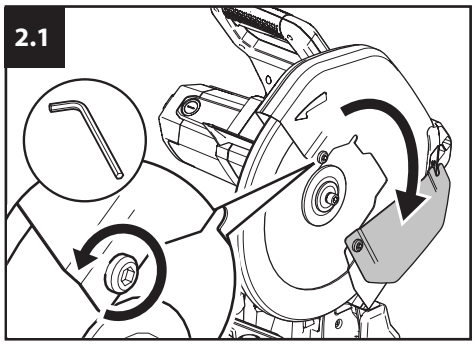
2.1

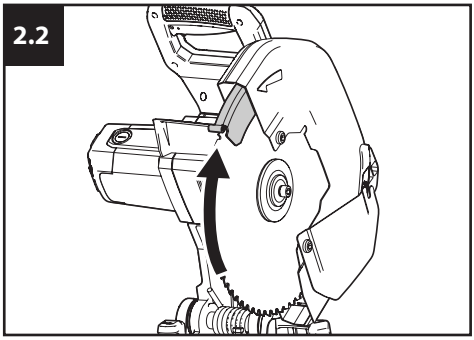
2.2

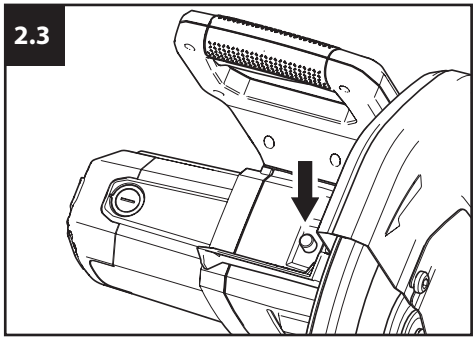
2.3

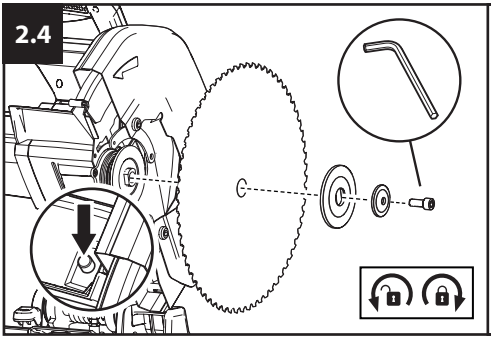
2.4

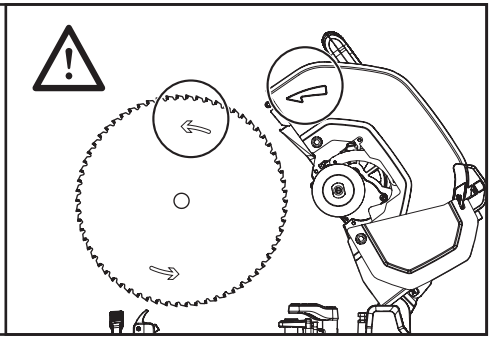

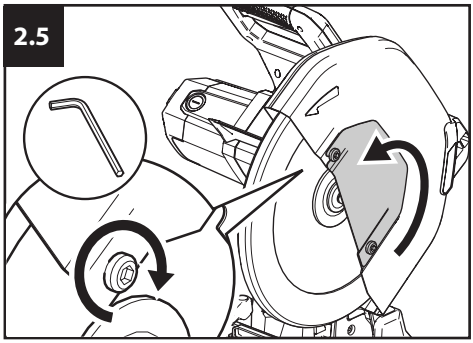
2.5

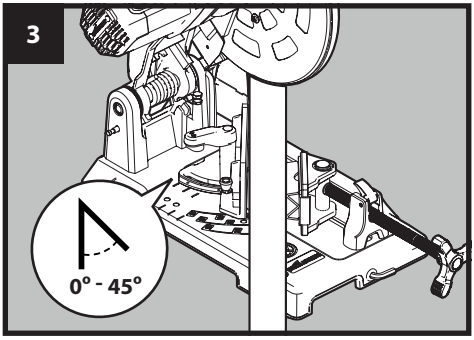
3
0° - 45°

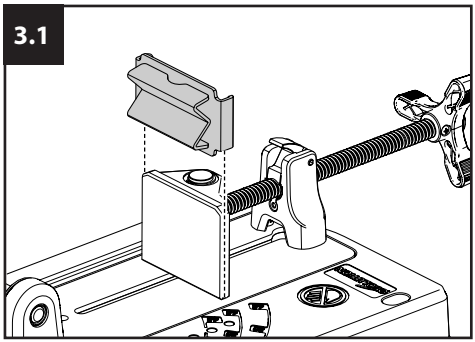
3.1

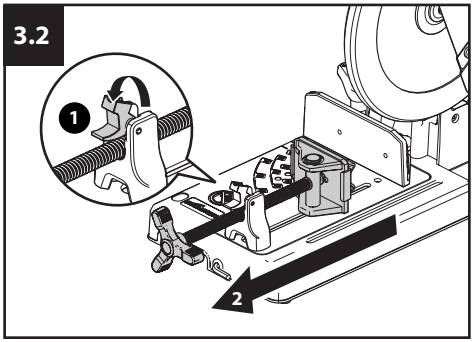
3.2
1
2

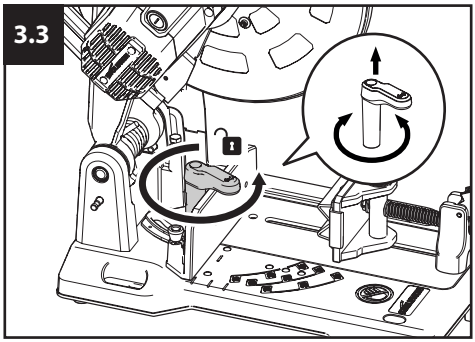
3.3

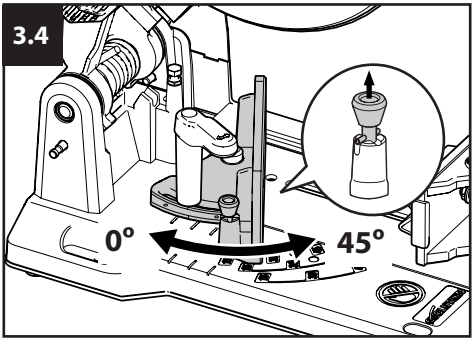
3.4
0°
45°

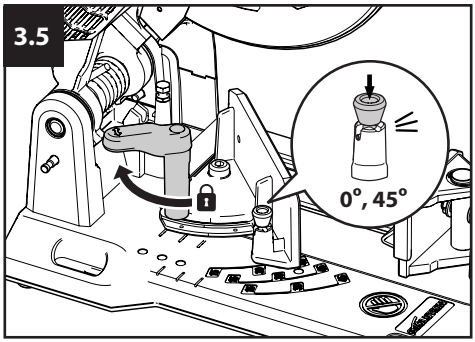
3.5
0°, 45°

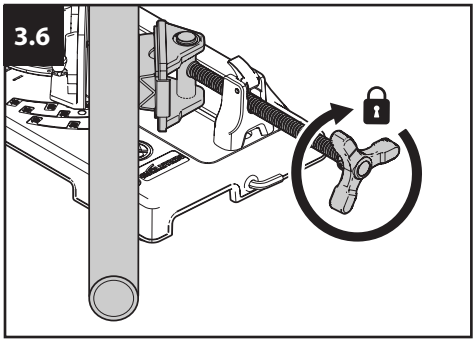
3.6

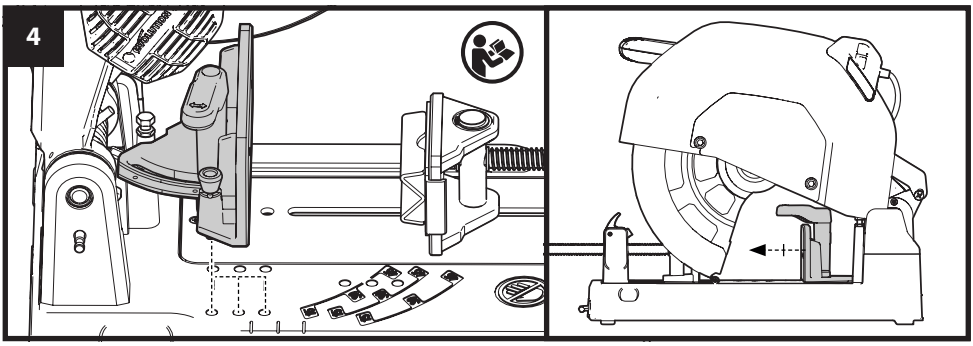
4

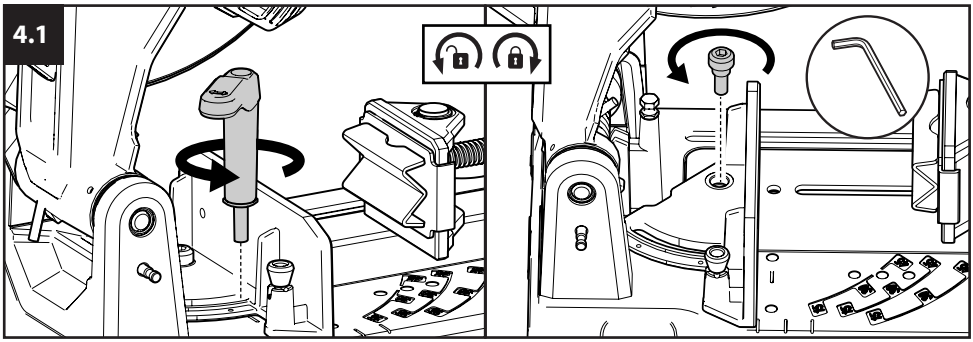
4.1

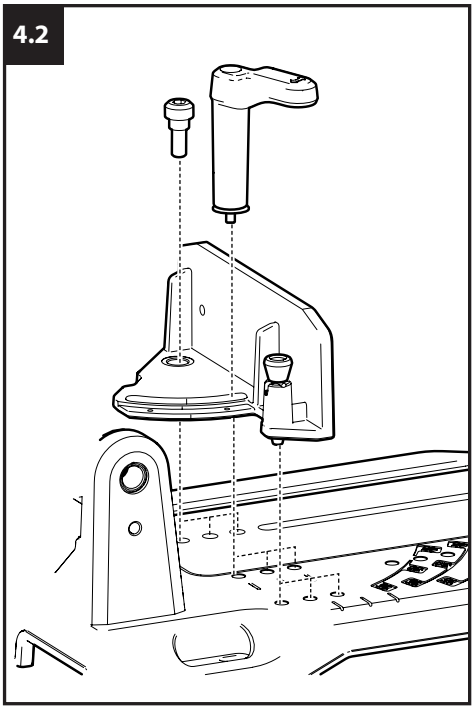
4.2

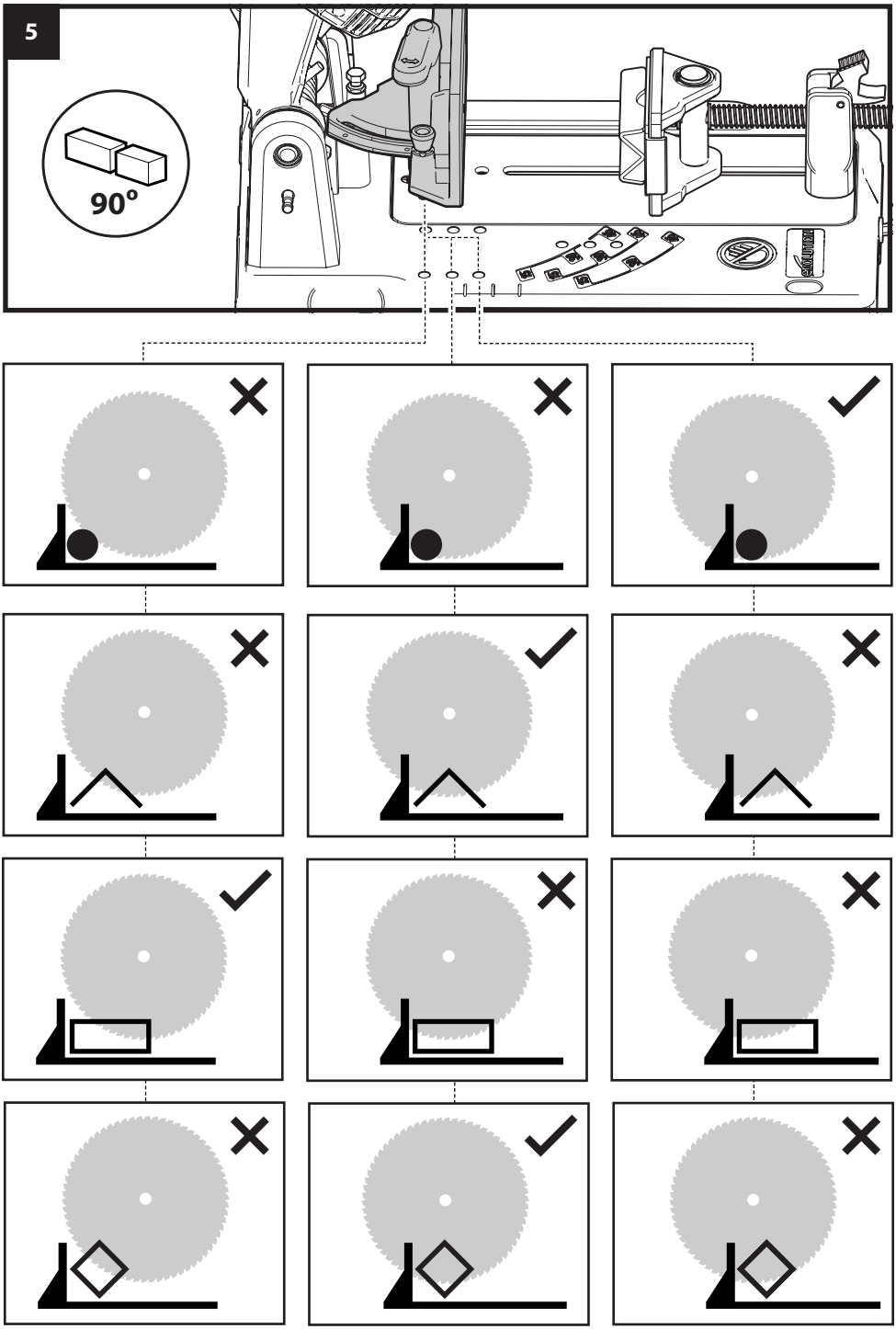
5
90º

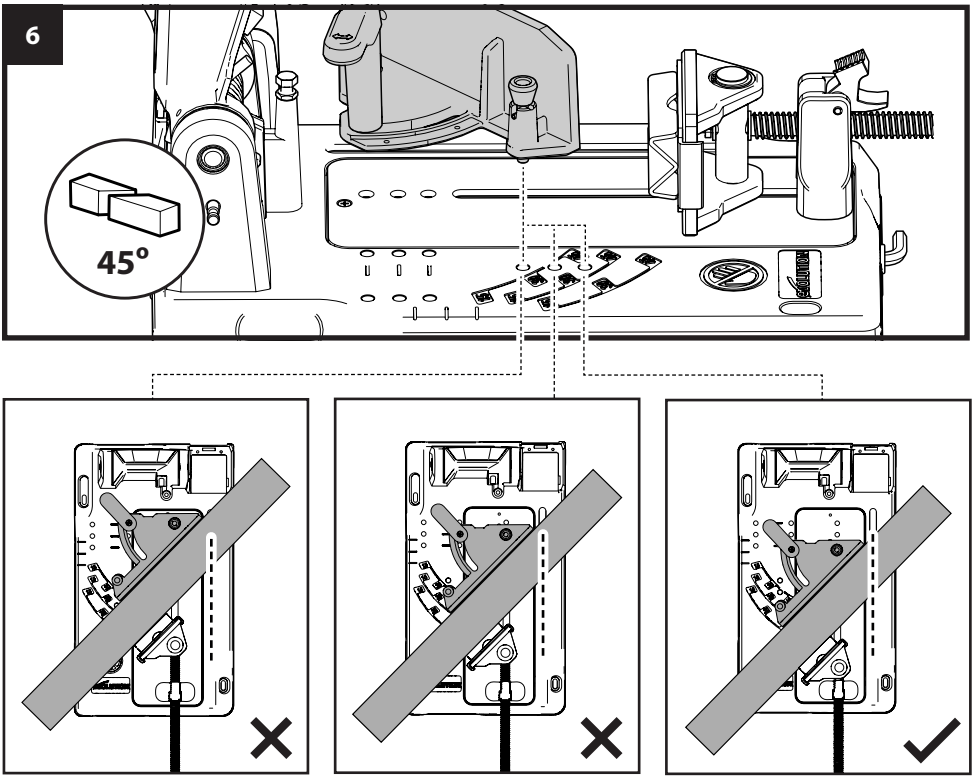
6
45º

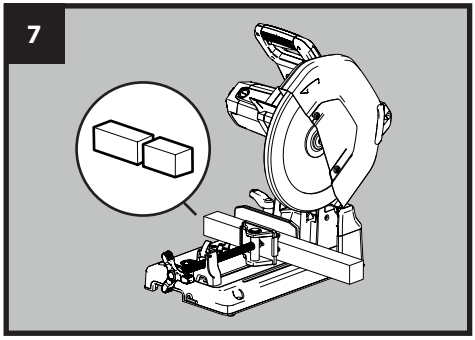
7

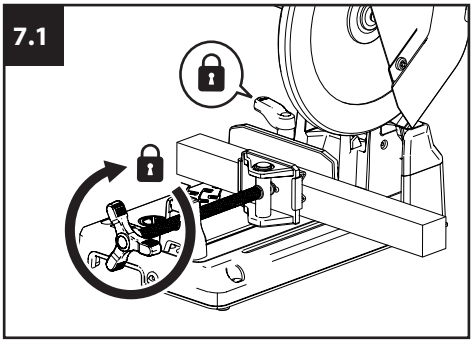
7.1

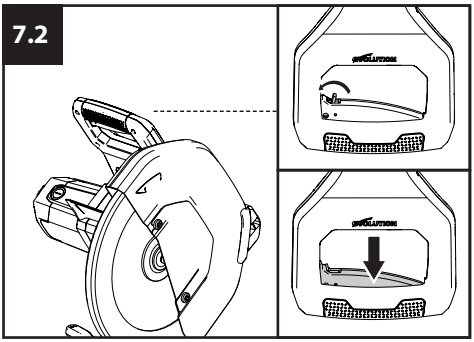
7.2
INSTALLATION
INSTALLATION

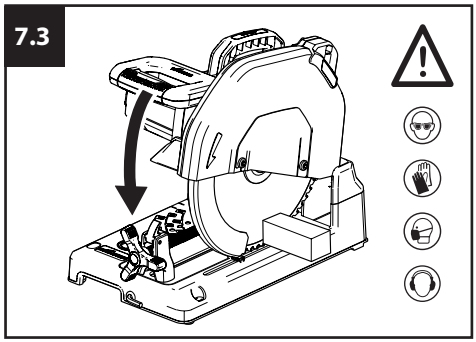
7.3

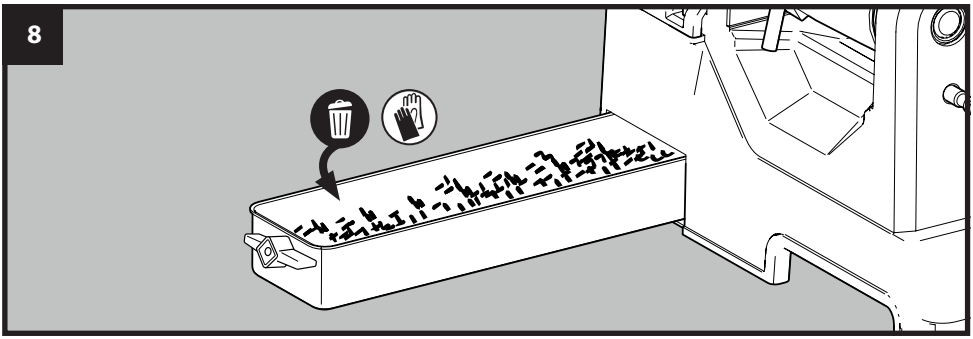
8

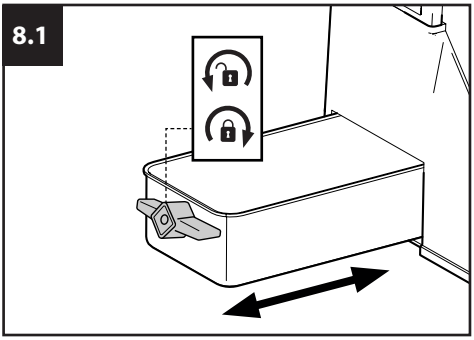
8.1

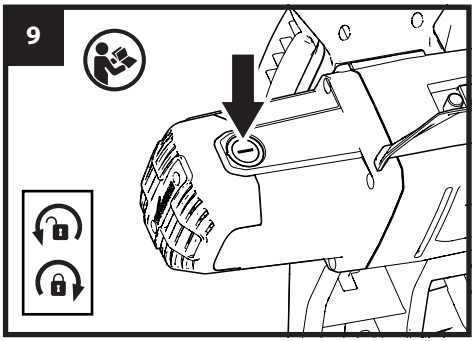

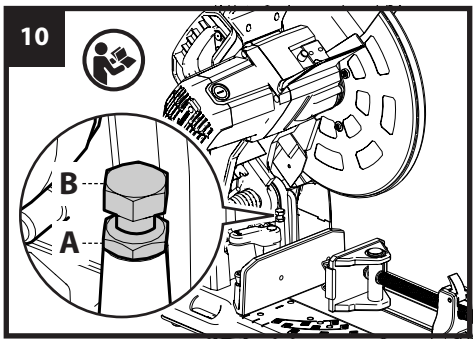

DECLARATION OF CONFORMITY

Evolution Power Tools Ltd. declares that the following products:

355mm S355CPSL Steel Chop Saw
Model No. 084-0001B, 084-0002B, 084-0003B, 084-0006B
355mm S355CPS Steel Chop Saw
Model No. 084-0001, 084-0002, 084-0003, 084-0006
355mm S355CPS-G2 Steel Chop Saw
Model No. 084-0001A, 084-0002A, 084-0003A
Brand: Evolution

Comply with the following directives and standards:

1907/2006, 2006/42/EC, 2014/30/EU,
2011/65/EU & (EU)2015/863, 2012/19/EU.

EN 62841-1:2015/A11:2022 • EN 62841-3-10:2015/A12:2022 •
EN 62841-3-10:2015/A11:2017 ***(For models: 084-0001A, 084-0003A)***
EN ISO 12100: 2010 • EN IEC 55014-1:2021 • EN IEC 55014-2:2021 •
EN IEC 61000-3-2-2019+A1:2021 •
EN IEC 61000-3-11:2019 (*For models: 084-0001, 084-0003*)
EN 61000-3-3:2013/A2:2021 ***(For models: 084-0001A, 084-0003A)***

The undersigned technical document holder makes this declaration on behalf of Evolution Power Tools Ltd.

Print: Barry Bloomer
Chief Executive Officer
Date: 24/05/2024

UK: Evolution Power Tools Ltd. Venture One, Longacre Close, Holbrook Industrial Estate, Sheffield, S20 3FR.
FR: Evolution Power Tools SAS. 61 Avenue Lafontaine, 33560, Carbon-Blanc, Bordeaux, France.

www.evolutionpowertools.com

UK
Evolution Power Tools Ltd
Venture One, Longacre
Close, Holbrook Industrial
Estate, Sheffield, S20 3FR

+44 (0)114 251 1022

EU
Evolution Power Tools SAS,
61 Avenue La Fontaine,
33560, Carbon-Blanc,
Bordeaux

+ 33 (0)5 57 30 61 89

AUS
Total Tools (Importing) Pty Ltd,
20 Thackray Road,
Port Melbourne,
Vic 3207

03 9261 1900